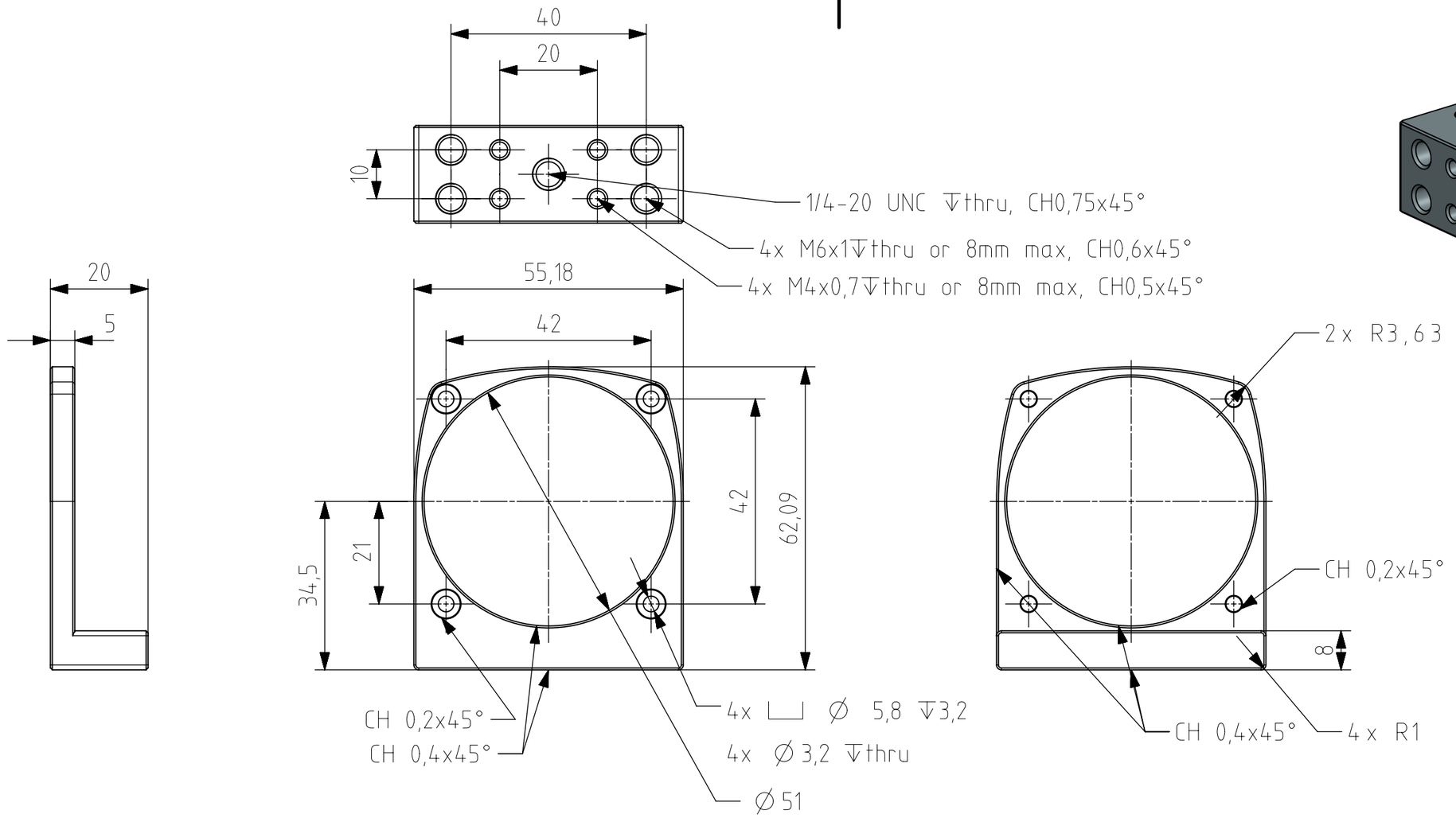

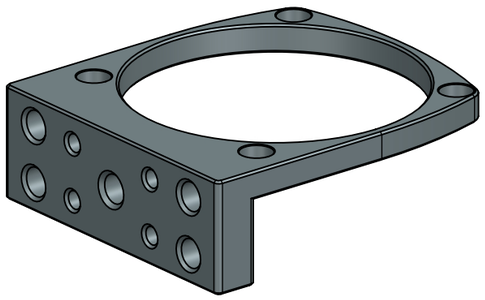

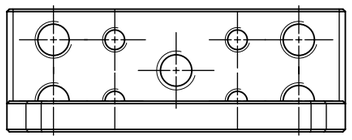

1. All linear and radius dimension tolerances according DIN ISO 2768-T1
   tolerance class f (fine) unless noted otherwise
2. True to size after anodization
3. Coating anodized- DIN 17611-E6, color - EV6(black)
   the faintness according to reference samples
4. Thread must be functional after coating(thread may be coated)
5. All edges chamfered 0,15x45° unless noted otherwise

	Date:	Name:	PN:	Customer PN:	Surface Quality:
Designed	-	R&D	MECH-MJ-ADPT-T	NA	Ra
Drawn	20210702	GS		Material:	Surface Finish:
Approved	20210702	GS	Project Class	ENAW6061	Black Anodized
QC			MJ	First angle projection	Weight:
MFGP			Top Level Assembly		
Department: R&D		Default tolerances: DIN ISO 2768-T1	Change / Date / Name	Units: mm	Scale: 1:1 / Format A3
ximea			Document Nr:	Doc Type: EU	PART REVISION REV1 / DOC REVISION A / Page: 1 of 1

This drawings is the property of XIMEA s.r.o.. No use thereof shall be made other than as a reference for proposals as submitted to XIMEA s.r.o. for jobs to be executed in conformity with such proposals unless the consent of said XIMEA s.r.o. has previously been obtained. No part of this drawing shall be copied or duplicated or its contents disclosed. The information contained on this drawing is confidential and proprietary.

A3